African Journal of Engineering Research
Vol. 3(2), pp. 44-55, August 2015
ISSN: 2354-2144
Full Length Research Paper

Exergy and economic analyses of crude oil distillation unit

Oludare J. Odejobi

Applied Thermodynamics and Process Design Research Laboratory, Department of Chemical Engineering, Obafemi Awolowo University, Ile-Ife 220005, Nigeria.

Accepted 12 August, 2015

ABSTRACT

Simulation of a crude distillation unit of a refinery is done using Aspen HYSYS V8.4 software. The exergy and economic analyses of the process are done using Microsoft Excel Spreadsheet and energy-capital costs trade-off approach, respectively. The results of exergy analysis showed that the crude distillation unit has the lowest exergy efficiency of 52.1% and highest irreversibility of 313670.11 kW. This is followed by the pre-flash drum and furnace with exergy efficiency of 74.1 and 75.1% and irreversibility of 195763.10 and 39259.06 kW, respectively. The economic analysis of the process for varying number of trays shows that the minimum number of trays for profitable operation of the plant is 40. It is concluded from the study that the economic operation of the process must consider improving the performance of the crude distillation unit and pre-flash drum and operating the process at practicable minimum number of trays.

Keywords: Exergy analysis, irreversibility, economic analysis, crude distillation unit, trays.

*Corresponding author. E-mail: oludareodejobi@yahoo.co.uk.

INTRODUCTION

Crude oil is a naturally occurring mixture, consisting predominantly of hydrocarbons with other elements such as sulphur, nitrogen, oxygen, etc. appearing in the form of organic compounds which in some cases form complexes with metals (Bland and Davidson, 1983). Elemental analysis of crude oil shows that it contains mainly carbon and hydrogen in the approximate ratio of six to one weight (Allinson, 1980). The mixture of hydrocarbons is highly complex, and the complexity increases with boiling point range. In separation of crude oil into different fractions, distillation process is employed. Distillation process is the most used separation operation in chemical and petrochemical industries and its ever-growing application is accompanied by a large increase in energy consumption in the process (Faria and Zemp, 2005). According to some recent estimates about 40% of energy involved in refinery and other continuous chemical processes are consumed in distillation (Olujic et al., 2003). Hence, any research effort directed towards economic operation of distillation column should attract global interest. In fact, efficient design and operation of distillation processes have become important issue of discussion in literatures (Chang and Li, 2005; Flores et al., 2003).

Crude Distillation Units (CDUs) are major energy-consuming units and therefore require extensive energy management. Heat Exchanger Network (HEN) design and process heat integration are widely used methods for improving process energy efficiency (Rivero et al., 2004). Exergy analysis is another thermodynamic principles applied to identify the area where improvement could be made in a process to achieve optimum performance. Exergy analysis includes conservation of mass and energy balance together with the second law of thermodynamics. The term exergy was introduced by Rant in 1956. At that time, exergy, called availability was used for the analysis of a steam turbine. The concept of chemical exergy and its associated reference states was introduced by Szargut et al. (1988). However, the regular use of exergy analysis starts in the second half of this century (Cornelissen, 1997). A progress in this area of research is so important to process operators because a careful evaluation of process and plant design using exergy analysis enables the identification and quantification

of the sources of inefficiencies or process irreversibility related losses.

Apart from safety consideration and environmental sustainability, chemical plants are built to make profit. An estimate of the required investment and the cost of production are needed before the profitability of a project can be assessed. In addition to these, operating conditions for optimum productivity of the process must be determined by trade-off between energy and capital costs. A capital investment is required for any industrial process, and determination of the necessary investment is an important part of a plant-design project. The total investment for any process consists of fixed-capital investment for physical equipment and facilities in the plant plus working capital which must be available to pay salaries, keep raw materials and products on hand, and handle other special items requiring a direct cash outlay. Thus, in an analysis of costs in industrial processes, capital-investment costs, manufacturing costs, and general expenses including income taxes must be taken into consideration (Sinnott, 2005).

This research work is aimed at developing a simulation model of the investigated crude oil distillation using HYSYS version 8.4 simulation software. The exergy analysis of the process will be carried out to identify the unit in need of improvement. Economic analysis will be performed to determine among other operating conditions, the optimum number of trays for profitable operation of the process.

THE CDU PROCESS DESCRIPTION

As shown in Figure 1, the overall crude distillation process may be divided into several stages which include: crude pre-heater, desalting, pre-flashing, fired heating, atmospheric distillation column, side stripping and the overhead condensation and separation. Raw crude is preheated in Heater 1 before entering the desalter drum. Wash water is injected into the desalter at the inlet and mixed with the heated raw crude stream. The effluent water is collected at the bottom of the desalter. After the desalter drum, the heated raw crude is further heated in Heater 2. The heated crude leaving Heater 2 enters the pre-flash drum where it is separated into pre-flash crude gas and pre-flash crude liquid. The pre-flash crude liquid is pumped into Heater 3 for further heating, and it is fired in the furnace. The heated crude liquid is almost entirely in vapour phase and enters the column. Also Light Distillate Oil steam (LDO), Heavy Distillate Oil (HDO) steam and column steam enter into the column. This column is the atmospheric pressure type and has 48 trays. Each side cut stripper has 6 trays for Kerosene stripper, 4 trays for LDO stripper and 4 trays HDO stripper. As the hot crude enters the flash zone, vapour ascends to the trays above where they are fractionated into HDO, LDO, Kerosene and Naphtha which is vapour. The three side streams are drawn from crude column to side strippers where lighter components are stripped off. The column has three pump-around (PA) consisting of top PA, Kerosene PA and LDO PA. Heat removal from the column is accomplished using these three pump-around for uniform vapour loadings in the column. The column overhead vapours leaving the column are condensed by the overhead condenser and separation is achieved into Gas, Sour Water and Naphtha.

THEORY

Exergy concept and exergy analysis

Exergy is defined as the maximum amount of work which can be obtained as a process is changed reversibly from the given state to a state of equilibrium with the environment, or the maximum work that can be obtained from any quantity of energy (Kotas, 1995).

Physical exergy

Physical exergy is the work obtainable by taking the system through reversible process from its initial state (T, P), to the reference state (T_o, P_o). The reference state of the system is defined with a reference temperature of 298.15 K and a reference pressure of 1 atm, unless otherwise stated. Exergy calculation is based on the determination of two thermodynamic state functions, which are the enthalpy, H and entropy, S. In this way, if a system is considered defined by its independent variables, pressure, temperature, composition, etc. and placed in a given environment ‘‘o’’, the physical exergy of the system is defined by the general expression:

$$Ex_j^{Phy} = Ex_i - Ex_o = \left(H_i - H_o\right) - T_o\left(S_i - S_o\right) \qquad (1)$$

Chemical exergy

Chemical exergy refers to the maximum work that can be extracted from a combined system of control mass and environment as the control mass comes into thermal and mechanical equilibrium with the environment without chemically reacting with the environment. The standard molar chemical exergy of the crude oil stream can be calculated from the standard molar chemical exergy of all identified components making up the crude as given in Equation 2 (Moran, 1999).

$$Ex_j^{Chem} = \sum_{m=1}^{j} y_m e_m^{-CH} + RT_o \sum_{m=1}^{j} y_m \ln y_m \qquad (2)$$

The standard specific chemical exergy (e.g. in kJ/kg) of each pseudo-component is calculated with the following

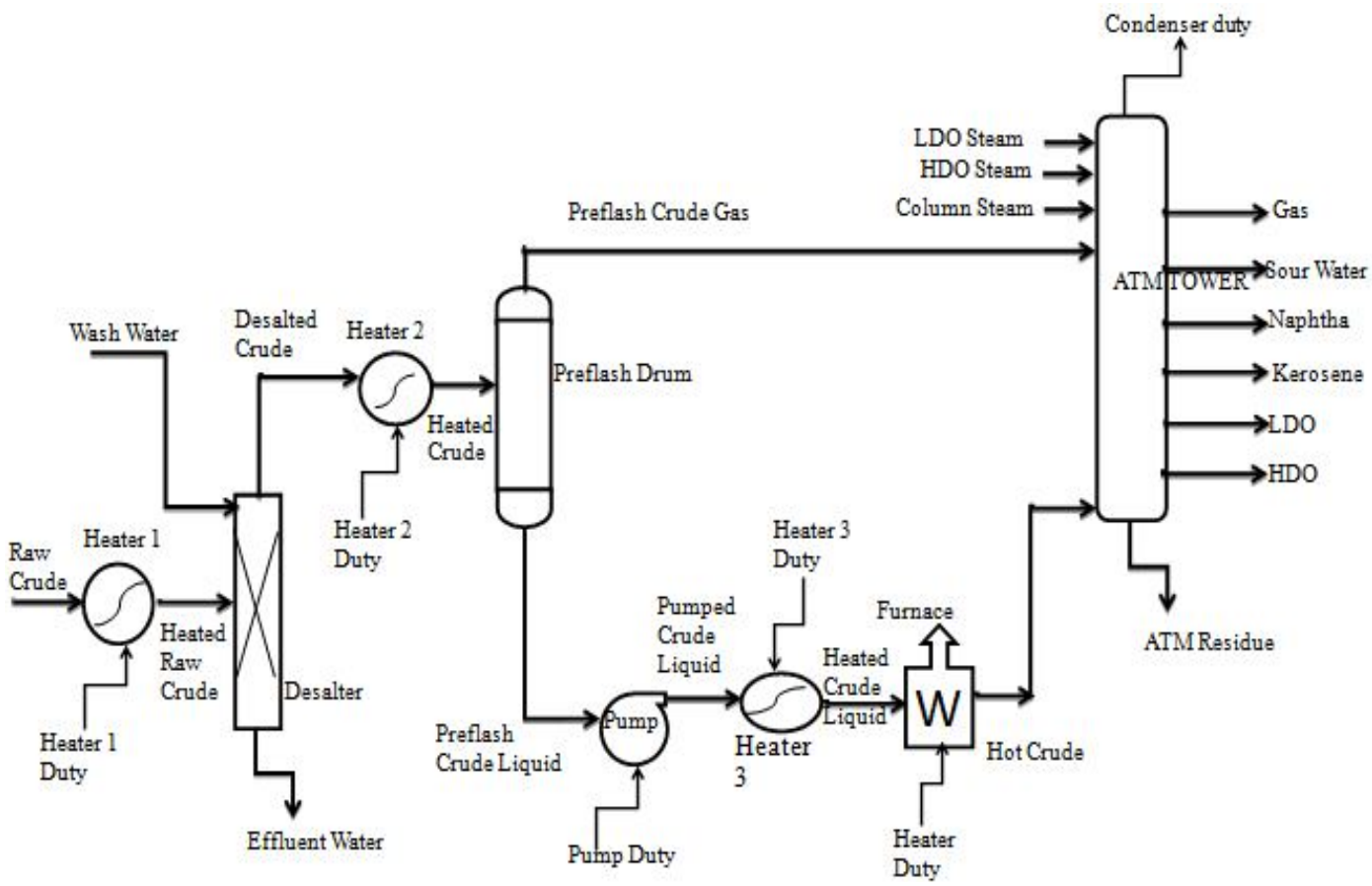

Figure 1. Block diagram of the crude distillation process.

Table 1. Standard molar chemical exergy.

Substance	Chemical formula	State	Molecular mass (kg/kmol)	Standard chemical exergy (kJ/mol)
Propane	C_3H_8	g	44.172	2152.8
Butane	C_4H_{10}	g	58.1243	2804.2
Pentane	C_5H_{12}	g	72.1514	3461.3
Water	H_2O	g	18.01534	9.5
Water	H_2O	l	18.01534	0.9

Source: Szargut et al. (1988).

modified expression (Rivero et al., 2004):

$$Ex_{qk} = NHV_k \beta_k + \sum z_m Ex_{qm} \quad (3)$$

Where z_m are the mass fractions of metals, Fe, Ni, V, and water in the pseudo-component *k* and Ex_{qm} are their corresponding specific standard chemical exergy, obtained from the standard chemical exergy values presented in Table 1 (Szargut et al., 1988). NHV_k is the net heating value of the pseudo-component *k* and β_k is the chemical exergy correction factor as a function of its C, H_2, O_2, S, and N_2, mass fractions (Rivero et al., 2004):

$$\beta_k = 1.0401 + 0.1728\frac{zH_2}{zC} + 0.0432\frac{zO_2}{zC} + 0.2169\frac{zS}{zC}\left(1 - 2.0628\frac{zH_2}{zC}\right) + 0.0401\frac{zN_2}{zC} \quad (4)$$

The standard molar chemical exergy (e.g. in kJ/kmol) of the crude oil stream was calculated from the standard molar chemical exergy of all identified components and pseudo-components.

Total exergy

The specific total exergy of a stream of material *j* neglecting the potential and kinetic energy terms consists of the physical exergy and the chemical exergy terms given as:

$$Ex_j^{Total} = Ex_j^{Phy} + Ex_j^{Chem} \quad (5)$$

The exergy rate of a stream of material *j* was obtained from its specific value as:

$$\dot{Ex}_j = \dot{m}_j \, Ex_j^{Total} \quad (6)$$

Irreversibility

Irreversibility, also called exergy destruction or exergy loss is a measure of exergy destruction due to entropy generation. The exergy loss of a system can be split in two (Rivero and Anaya, 1997). On one side are those resulting from the irreversibility of the processes taking place in the system (internal losses), and on the other side, those resulting from an exergy discharge to the environment (external losses). These losses can also be calculated using the Gouy–Stodola theorem (Rivero et al., 2004) as:

$$Irr = \sum Ex_{input} - \sum Ex_{output} \quad (7)$$

Exergy efficiency

The unit and overall process exergetic efficiencies can be defined, according to Lozano and Valero (1993) and Tsatsaronis and Winhold (1985) by Equations (8a) and (8b), respectively as:

$$\psi_{unit} = \frac{\sum \dot{E}x_{\text{sink}}}{\sum \dot{E}x_{\text{source}}} \quad (8a)$$

$$\psi_{overall} = \frac{\sum \dot{E}x_{out}}{\sum \dot{E}x_{in}} \quad (8b)$$

Cost targeting for optimal number of trays in the distillation column

Capital cost estimates for chemical process plants are often based on an estimate of the purchase cost of the major equipment items required for the process, the other costs being estimated as factors of the equipment cost. The accuracy of this type of estimate depends on the design stage and on the reliability of the data available on equipment costs. At the design stage when detailed equipment specifications are available and firm quotations have been obtained, an accurate estimation of the capital cost of the project can be made (Sinnott, 2005).

Energy requirements will affect the operating cost, while the size of heat exchangers, heaters, coolers, column and other process components will affect capital cost. Energy and capital costs targets for different number of trays can therefore be used to determine where the tray number is minimum. In order to attain an optimum number of trays value, a graphical method that involves a plot of the total annual cost against different number of trays as shown in Figure 2 can be a useful approach.

METHODOLOGY

Process simulation

The crude distillation unit under investigation was simulated using Aspen HYSYS Version 8.4. The results obtained from simulation were used for thermodynamic and economic analyses of the process using Microsoft Excel. In the component list view, the non-oil components (water, methane, ethane, propane, n-butane, i-butane, n-pentane and i-pentane) were chosen and specified. Peng-Robinson property package was chosen because of its flexibility and ability to handle the hypothetical, non-oil and the oil components. Characterization of oil in HYSYS was done using the most recent assay data on Bonny Light Crude. The following bulk property experimentally determined were introduced to HYSYS for conducting the characterization: API degree, molecular weight, sulphur content, pour point, basic nitrogen content, total nitrogen content, vapour pressure, carbon content and lights composition. After the assay was calculated, the oil was cut and blended to produce hypothetical components that could be used in the simulation. This was done using the cut/blend tab on the oil manager environment. The cut was done using auto-cut option which generates the hypothetical components based on the initial boiling point and the temperature ranges available. Once this was done, the oil was installed and made ready for use in simulation. The process stream parameters used in the simulation are presented in Table 2 and the bulk crude properties are

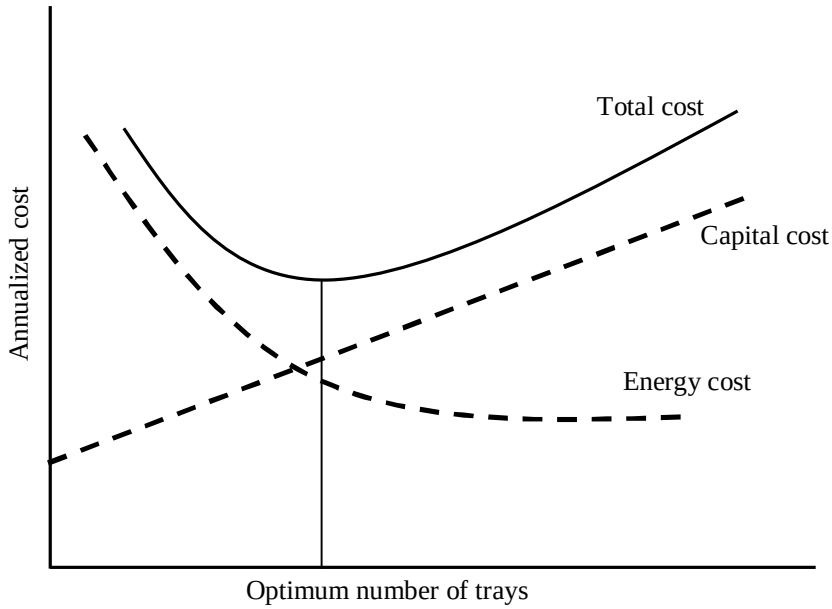

Figure 2. Energy-capital costs trade-off.

Table 2. Process stream parameters.

Material stream	Temperature (°C)	Pressure (kPa)	Mass flow rate (kg/h)
Raw crude	25	2553	836211
Heated raw crude	137	1670	836211
Wash water	95	1670	49505.5
Effluent water	203	1670	49505.5
Desalted crude	124.3	1670	836211
Heated crude	202	493.6	836211
Pre-flash crude gas	202	493.6	39194.7
Pre-flash crude liq	202	493.6	797016
Pumped crude liq	202.6	1916	797016
Heated crude liq	226	1719	797016
Hot crude	353	395.5	797016
LDO steam	257	197.4	5600.89
HDO steam	308	202.3	6620.55
Column steam	326	120	6620.55
Gas	25.74	19.61	26724.3
Naphtha	25.74	19.61	165404
Kerosene	191.5	77.31	100300
Sour water	25.74	19.61	17609.4
LDO	202	88.7	175415
HDO	247.5	97.46	102000
ATM residue	316.9	108.9	267600

presented in Table 3.

Exergy analysis

The exergy analysis of the process streams was done using the Equations 1 to 8b. The analysis was done in order to evaluate the process unit irreversibility, process unit exergy efficiency, overall process irreversibility and exergy efficiency for varying number of trays in the distillation column. This was done to enable the identification of number of trays that achieve optimum

Table 3. Bulk crude properties.

Bulk crude properties	Values
API gravity	34.87
Reid vapour pressure at 38°C, kgf/cm^2	0.3
BS and W% Vol	0.1
Pour point, °C	<0
Ash content	0.00278
Conradson carbon residue, %wt	1
Salt content, PTB	1.04
Kinematic viscosity at 38°, CST	3.66
Water content, %Vol	<0.05
Nickel, ppm	0.022
Lead, ppm	0.027

Table 4. Typical factors for estimation of project fixed capital cost.

S/N	Item	Process type		
		Fluids	Fluids-Solids	Solids
1	Major equipment, total purchase cost	*PCE*	*PCE*	*PCE*
	f_1 Equipment erection	0.4	0.45	0.50
	f_2 Piping	0.70	0.45	0.20
	f_3 Instrumentation	0.20	0.15	0.10
	f_4 Electrical	0.10	0.10	0.10
	f_5 Buildings, process	0.15	0.10	0.05
	*f_6 Utilities	0.50	0.45	0.25
	*f_7 Storages	0.15	0.20	0.25
	* f_8 Site development	0.05	0.05	0.05
	* f_9 Ancillary buildings	0.15	0.20	0.30
2	Total Physical Plant Cost (PPC) $PPC = PCE\ (1+ f_1+\ldots+ f_9) = PCE\ x$	3.40	3.15	2.80
	f_{10} Design and Engineering	0.30	0.25	0.20
	f_{11} Contractor's fee	0.05	0.05	0.05
	f_{12} Contingency	0.10	0.10	0.10
	Fixed capital = $PPC\ (1+ f_{10}+ f_{11}+ f_{12})= PPC\ x$	1.45	1.40	1.35

*Omitted for minor extensions or additions to existing sites. Source: Sinnott (2005).

efficiency in the process.

Economic analysis

The factorial method for capital cost estimation was used. The typical factors for estimation of project fixed capital cost are presented in Table 4 (Sinnott, 2005). The physical plant cost that takes into consideration the equipment erection, piping, instrumentation and electrical work was calculated using Equation (9) (Sinnott, 2005):

$$\text{Total Physical Plant Cost}\left(PPC\right) = PCE \times \left(1 + f_1 + \ldots + f_6\right) \quad (9)$$

The Physical Cost of Equipment, *PCE* for all the units in the process are provided in Table 5. In the estimation of equipment fixed capital cost, Equation 10 that includes consideration for design and engineering, contractor's fee and contingency was used (Sinnott, 2005):

$$\text{Fixed Capital Cost}\left(PPC\right) = PCE \times \left(1 + f_{10} + f_{11} + f_{12}\right) \quad (10)$$

The fixed capital cost can be amortized over the useful life of the plant using Equation 11:

Annualized Capital Cost = Capital cost × Annualization factor (11)

Table 5. Physical cost of equipment *(PCE).*

S/N	Units	Equipment cost ($)
1	Heater 1	327700
2	Heater 2	332400
3	Heater 3	611400
4	Furnace	1431200
5	Pre-flash Drum	127300
6	Pump	277200
*7	ATM Tower	5798300
	Total	8905500

*shows that the equipment cost is changing with height. Source: Equipment Cost of Units from ASPEN HYSYS V8.4.

Table 6. Energy consumption of units.

S/N	Energy consumption	Wattage (kW)
1	Heater 1	54750
2	Heater 2	46980
3	Heater 3	13760
4	Furnace	108300
5	Pump	593.1
6	Condenser	82730
7	Kero_SS_Reb	5231
8	TopPA_Cooler	25770
9	KeroPA_Cooler	16860
10	LDO_PA_Cooler	15470
Total		370444.1

Source: Energy Consumption by process units as extracted from ASPEN HYSYS 8.4.

$$\text{Annualization factor} = \text{Fixed Capital Cost} \times \left(\frac{j(1+j)^N}{(1+j)^N - 1} \right) \quad (12)$$

The energy consumption of all the units presented in Table 6 is used for the process energy costing. Consideration was given to the cost of electricity as energy cost using Equation 13 as:

$$\text{Annualized Energy Cost} = \text{Annual Electricity Consumption} \times \left(\frac{\$0.12}{kWh} \right) \quad (13)$$

The unit cost of electricity was $0.12/kWh at an exchange rate of ₦160 to a dollar. An annual interest rate of 12% was adopted. It was assumed that the plant operates for 8,060 h per year. The economic basis for the calculations involved an objective function that sums the capital and energy costs of the process assuming a payback period of twenty-five years for capital expenditure (Kaymak et al., 2010). The total annual cost of the process at specified number of trays in the column is obtained as a sum of the annualized energy and capital costs.

$$\text{Annualized Total Cost} = \text{Annualized Capital Cost} + \text{Annualized Energy Cost} \quad (14)$$

RESULTS AND DISCUSSION

Exergy analysis of the process unit

The following were the results of the simulation, exergy and economic analyses of crude oil distillation unit. The process flow diagram of the converged simulation is shown in Figure 3, and the corresponding column environment with 48 trays and three side strippers is presented in Figure 4. The result of process streams total exergy analysis is presented in Table 7. The results presented in Table 7 are used in the evaluation of process unit exergy analysis presented in Table 8. It could be observed from the results presented in Table 8 that the atmospheric distillation tower has the lowest exergy efficiency of 52.1% followed by the pre-flash drum (74.1%) and furnace (75.1%). The heat exchangers however have higher exergy efficiency in the range of 98.8 to 99.4%, while the desalter has the highest exergy efficiency of 99.9%. The column has the lowest exergy efficiency due to high entropy generation resulting from separation process taking place in the column. These involve momentum loss due to pressure driving force, thermal loss and mass transfer resulting from temperature driving force and mixing of fluids, respectively in the column (Odejobi et al., 2014; Waheed et al., 2014). The high exergy efficiency of the heat exchangers could be due to the fact that almost all of the energy supplied into the unit was dissipated to heat within the process (Rosen and Bulucea, 2009).

The atmospheric distillation tower and the pre-flash drum have high irreversibility of 313670.11 and 195763.10 kW, respectively. The contributions of atmospheric tower and the pre-flash drum tower to the total irreversibility occurring in the process are 54.2 and 33.9%, respectively. The essence of pre-flash is to reduce the heat load needed in the distillation column for separation process. The heated crude, on entering the pre-flash drum, is separated into crude liquid at the bottom and crude gas at the top as a result of sudden pressure drop in the pre-flash drum. Since the entropy is a function of temperature and pressure, the high irreversibility in the pre-flash unit is mainly due to exergy losses resulting from entropy generation following heated crude liquid flashing into crude gas. While the exergy loss in the distillation column is due to entropy generation resulting from temperature variation and pressure drop accompanies separation operation taking place in the

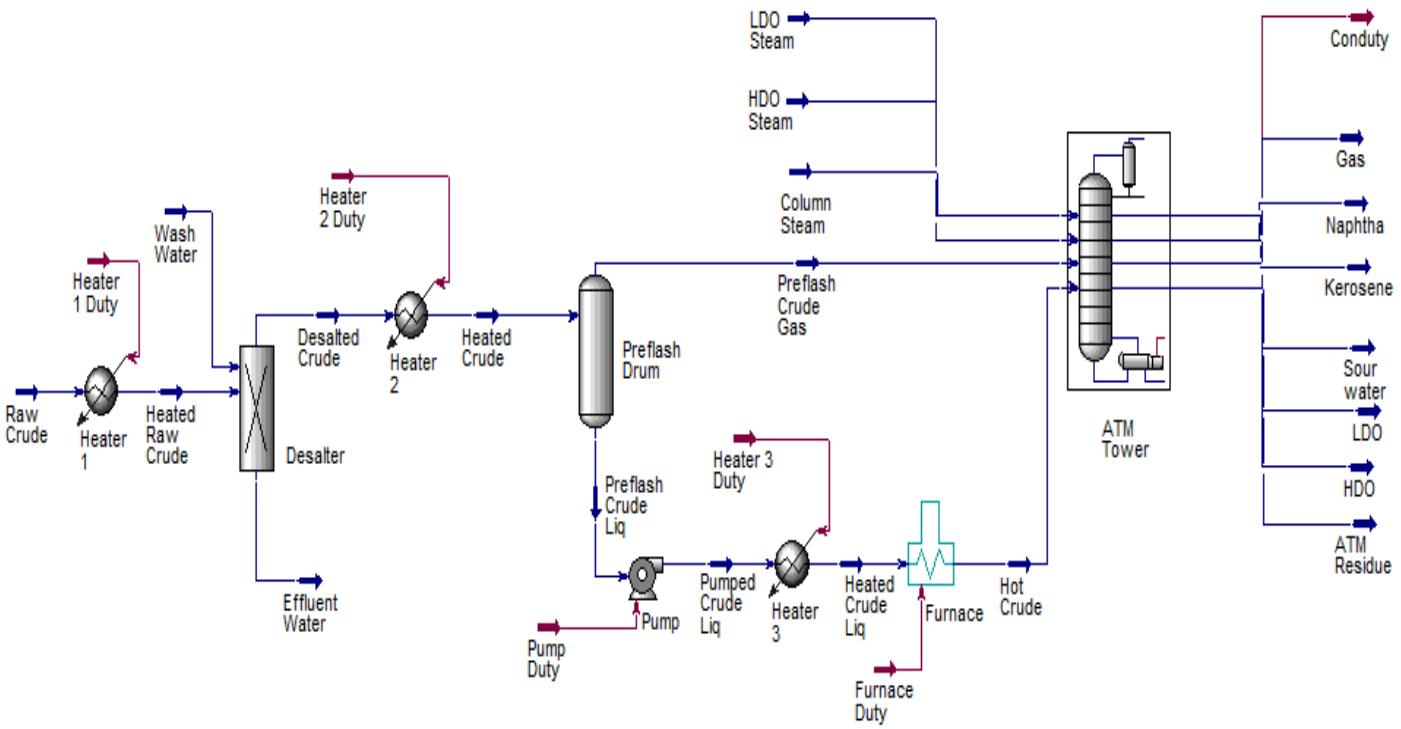

Figure 3. Process flow diagram of crude oil distillation unit.

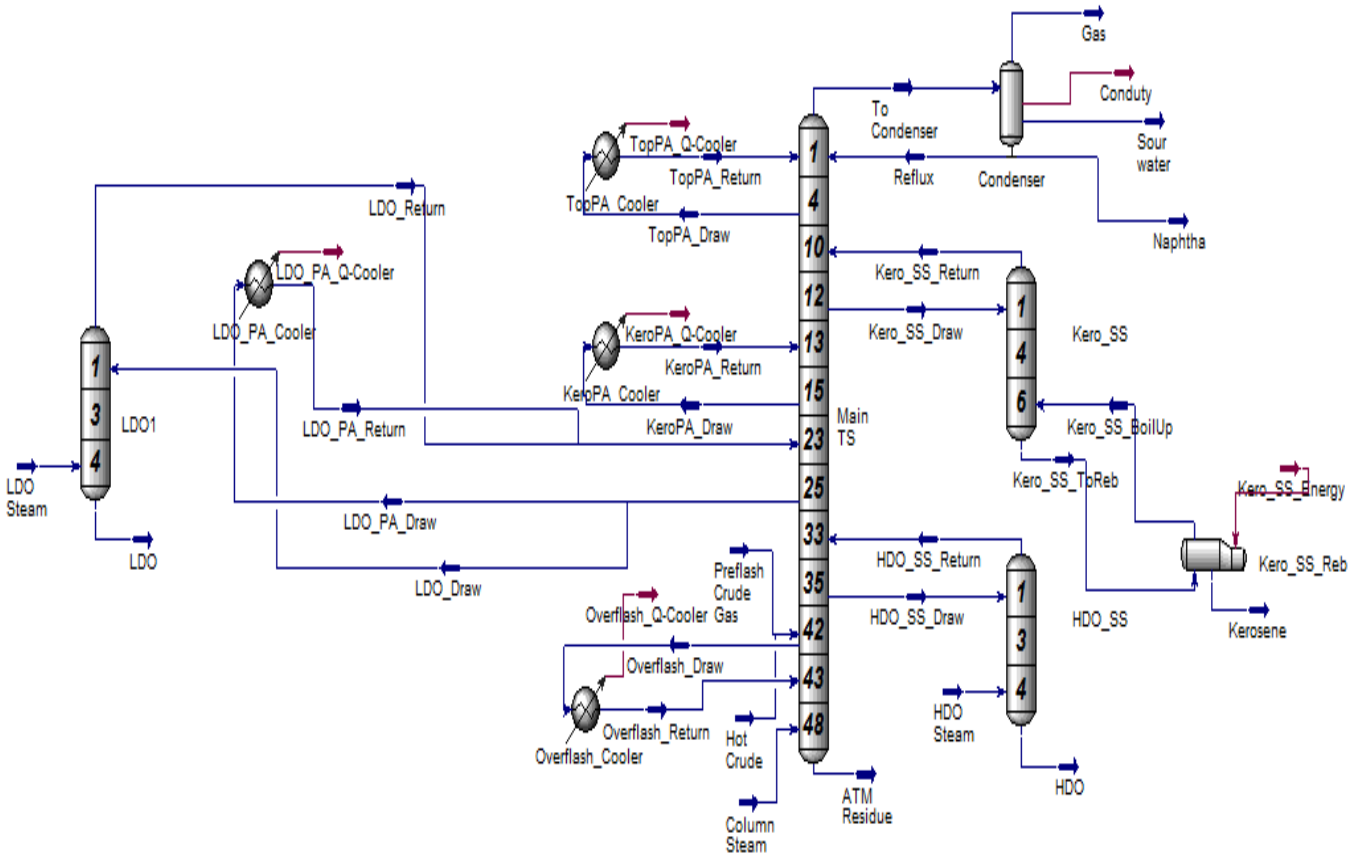

Figure 4. Column environment for the crude oil distillation unit.

Table 7. The result of process stream exergy analysis.

Material stream	Mass flow (kg/h)	Physical exergy (kJ/kg)	Chemical exergy (kJ/kg)	Total exergy (kJ/kg)	Total exergy rate (kJ/h)
Raw crude	836211	73.40273	3249.964	3323.366	2779035732
Heated raw crude	836211	109.8113	3249.964	3359.775	2809480971
Wash water	49505.5	102.7901	49.95743	152.7475	7561841.91
Effluent water	49505.5	248.7835	527.3284	776.1119	38421804.5
Desalted crude	836211	101.4778	3249.964	3351.441	2802512392
Heated crude	836211	164.7058	3249.964	3414.669	2855384384
Pre-flash crude gas	39194.7	238.6895	16762.8	17001.49	666367349
Pre-flash crude liquid	797016	159.8614	1716.974	1876.835	1495868333
Pumped crude liquid	797016	162.2531	1716.974	1879.227	1497774627
Heated crude liquid	797016	186.2047	1716.974	1903.178	1516864383
Hot crude	797016	412.4263	1716.974	2129.4	1697166769
LDO steam	5600.89	754.8447	527.3284	1282.173	7181316.12
HDO steam	6620.55	805.5718	527.3284	1332.9	8824531.41
Column steam	6620.55	752.8253	527.3284	1280.154	8475320.52
Gas	26724.3	18.90918	25875.71	25894.62	692014449
Naphtha	165404	69.90225	2280.994	2350.897	388848373
Kerosene	100300	150.6589	47480.65	47631.3	4777419548
Sour water	17609.4	69.94097	49.95743	119.8984	2111334.98
LDO	175415	158.6228	2.572282	161.1951	28276062.3
HDO	102000	206.9267	2.256322	209.183	21336666.6
ATM residue	267600	293.296	1.987862	295.2839	79017970.3

Table 8. Exergy efficiency and irreversibility distribution in each unit operations.

Units	Exergy efficiency (%)	Irreversibility (kW)	% Contribution to total irreversibility
HEN 1	98.8	9077.76	1.57
HEN 2	99.4	14883.80	2.57
HEN 3	98.6	5303.28	0.92
Furnace	75.1	39259.06	6.79
Pre-flash drum	74.1	195763.10	33.85
Atmospheric tower (ATM)	52.1	313670.11	54.24
Desalter	99.8	297.23	0.05
Total		578254.35	100

distillation column.

The exergy losses due to use of electrical pumps and heat exchangers are quite small. The losses in these units are unavoidable; they occurred due to resistance from the electrical devices in the pumps, friction losses due to contact with the wall as the fluid flows through the heat exchanger unit.

Effect of number of trays on overall exergy efficiency and irreversibility

The capital cost of crude distillation column is highly dependent on the number of trays making up the column. Since the distillation column is the major unit that determines the overall exergy efficiency of the crude distillation process, the effect of increasing number of trays on the overall exergy efficiency and irreversibility was investigated and the result presented in Figure 5. It could be observed from the figure that the overall exergy efficiency increases with increasing number of trays while the exergy loss (irreversibility) was reducing. This is because increasing the number of trays results in better separation. The reflux and liquid flow to the bottom of the column are reduced. The pressure drop within the column increased, therefore the entropy generation due to liquid mixing resulting from separation within the column also reduced. Hence, overall exergy efficiency increases while the overall irreversibility reduces with increasing number of trays.

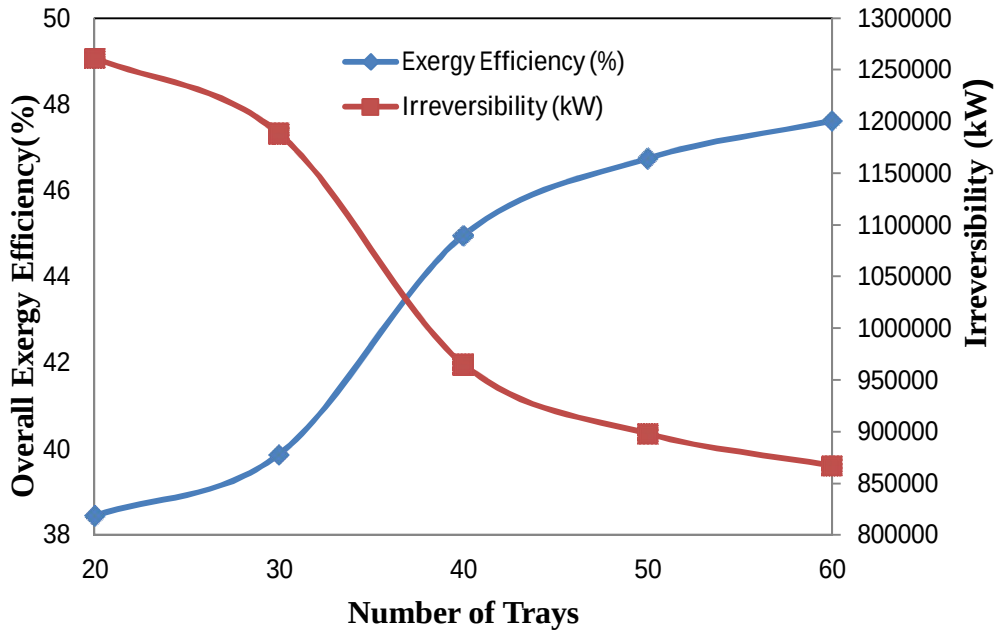

Figure 5. Effect of number of trays on overall exergy efficiency and irreversibility.

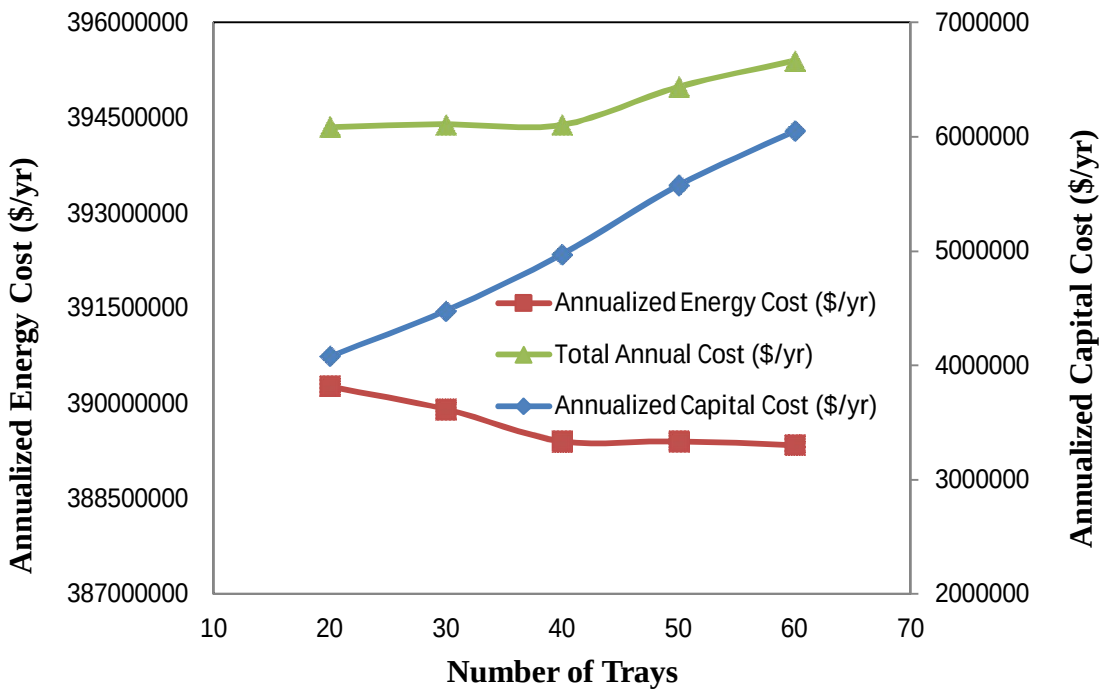

Figure 6. Effect of variation of number of trays on process costing.

Economic analysis of the process

In order to determine the optimum number of trays for the process, the economic analysis that takes into consideration the capital cost estimates of all the process units and the cost of energy consumed for a given number of trays was carried out and the result presented in Figure 6. It could be observed from the figure that the annualized capital cost of equipment increases with increasing number of trays. This is expected because the major equipment that determines the variation in capital cost is the size of the distillation column, and this size is

affected by increasing the number of trays. Since more trays translate to more height of equipment, the capital cost is therefore expected to increase with increasing size of the column. The sizes of other units in the process are sufficiently large to handle the heat demand and other process properties variation for the number of trays up to 60 trays in the distillation process under investigation. It was also observed from the figure that the annualized energy cost was decreasing as the number of trays was increasing. This is because with increasing number of trays there is better separation, reduced reflux, and lower liquid flow to the bottom of the column and therefore reboiler duty to maintain the vapour rate in the column is reduced. The distillate is richer in the more volatile component, while the bottom has less, indicating a better separation. Therefore, the total annual cost due to the balancing between increasing annualized capital costs and decreasing annualized energy cost was minimized (Kaymak et al., 2010). Further analysis of the figure revealed that the total cost is minimum when the number of trays is 40. These number of trays are therefore considered to be the optimum number of trays at which this process could be run profitably (Ferguson, 1969).

CONCLUSIONS

It is concluded from the study that there is need for economic operation of the distillation unit since it is the major unit contributing to the overall exergy efficiency, irreversibility and the capital cost variation for increasing number of trays in the crude distillation operation. As a way forward to achieving optimal economic benefit of the process, the study concluded from the exergy and economic analyses methods adopted that among other process parameters, the optimum numbers of trays for optimum performance of the process in terms of overall exergy efficiency, irreversibility and operating cost benefits is 40.

Nomenclature: T_o, Reference temperature (^oC or K); **H_i,** specific enthalpy at system temperature, T_i (kJ/kg); **S_i,** Specific entropy at system temperature, T_i (kJ/kg K); **H_o,** specific enthalpy at reference temperature, T_o (kJ/kg); **S_o,** specific entropy at reference temperature, T_o (kJ/kg K); $\boldsymbol{Ex_j^{phy}}$**,** physical exergy of stream of material, *j* (kJ/kg); $\boldsymbol{Ex_j^{Chem}}$**,** chemical exergy of stream of material, *j* (kJ/kg); $\boldsymbol{y_m}$**,** mole fraction of component *m*; $\boldsymbol{R}$**,** Universal gas constant taken as 8.314 kJ/kmol.K; $\boldsymbol{e_m^{-CH}}$**,** standard molar chemical exergy (kJ/kmol) of various substances at T_o and P_o; $\dot{m}_j$**,** mass flow rate of material stream, *j* (kg/h); $\dot{E}x_j$**,** exergy flow rate of a stream of material *j* (kJ/s); $\psi_{overall}$**,** overall process exergetic efficiency (%); $\sum \dot{E}x_{out}$**,** Summation of exergy flow rate of all outlet streams (kJ/s); $\sum \dot{E}x_{in}$**,** summation of exergy flow rate of all inlet streams (kJ/s); I**,** Irreversibility rate (kW); ***j,*** Interest rate; ***N*,** number of periods (years).

REFERENCES

Allinson JP, **1980**. Criteria for Quality of Petroleum Product, 4th ed., Gulf Publishing Company, Houston.

Bland FW, **Davidson** RL, **1983**. Petroleum Processing Handbook. 4th ed., William Clowers and Sons Limited: New York.

Chang H, **Li** W Jr, **2005**. A new exergy method for process analysis and optimization. Chem Eng Sci, 60:2771- 2784.

Cornelissen RL, **1997**. Thermodynamics and Sustainable Development - The Use of Exergy Analysis and the Reduction of Irreversibility, Enschede, the Netherlands.

Faria SHB, **Zemp** RJ, **2005**. Using exergy loss profiles and enthalpy temperature profiles for the evaluation of thermodynamic efficiency in distillation columns. Thermal Eng, 4:76.

Ferguson CE, **1969**. The Neoclassical Theory of Production and Distribution. 1st ed., Cambridge University Press, London.

Flores OA, Cardenas C, Hernandez S, Rico-Ramýrez V, **2003**. Thermodynamic analysis of thermally coupled distillation sequences. Ind Eng Chem Res, 42:5940-5945.

Kaymak BD, Yilmaz D, Yilmaz S, Hosgor E, **2010**. Quantitative Comparison of Reactor/Column/Recycle Process with Reactive Distillation Column for Ternary Systems. 20thEuropean Symposium on Computer Aided Process Engineering – ESCAPE20.

Kotas TJ, **1995**. The Exergy Method of Thermal Plant Analysis. 2nd ed. Krieger Publishing Company, Florida, USA.

Lozano MA, **Valero** A, **1993**. Theory of the exergetic cost. Energy, 18(9):939-960.

Moran MJ, **1999**. Engineering Thermodynamics, Mechanical Engineering Handbook, CRC Press LLC, Boca Raton.

Odejobi OJ, Jisieike CF, Anozie AN, **2014**. Simulation and Exergy Analysis of Processes for CO_2 Capture and Utilization for Methanol Production. *IJEX* (http://www.inderscience.com/info/ingeneral/forthcoming.php?jcode=ijex). In press.

Olujic Z, Fakhri F, De Rijke A, De Graauw J, Jansens PJ, **2003**. Internal heat integration – The key to an energy-conserving distillation column. J Chem Technol Biotechnol, 78:241-242.

Rant Z, **1956**. Exergie, Einneues Wort fur "Technische Arbeitsfahigkeit" (Exergy, a New Word for "Technical Available Work")". *Forschung auf dem Gebiete des Ingenieurwesens*, 22:36–37.

Rivero R, **Anaya** A, **1997**. Exergy Analysis of Industrial Processes, Energy-Economy Ecology. Latin Am Appl Res, 27(4):191-205.

Rivero R, Garcia M, Urquiza J, **2004**. Simulation, exergy analysis and application of diabatic distillation to a tertiary amyl methyl ether production unit of a crude oil refinery. Energy, 29:467-489. Rivero R, Rendon C, Salvador G, 2004. Exergy and exergoeconomics analysis of a crude oil combined distillation unit. Energy, 29:1909-1927.

Rosen MA, **Bulacea** CA, **2009**. Using exergy to understand and improve the efficiency of electrical power technologies. Entropy, 11(4):820-835.

Sinnott RK, **2005**. Coulson & Richardson's Chemical Engineering volume 6. Chemical Engineering Design, 4th ed. Elsevier Butterworth-Heinemann.

Szargut J, Morris DR, Steward FR, **1988**. Exergy Analysis of Thermal, Chemical and Metallurgical Processes. New York: Hemisphere Publishing Corporation.

Tsatsaronis G, **Winhold** M, **1985**. Exergoeconomic analysis and evaluation of energy-conversion plants. 1: A new general methodology. Energy, 10(1):69–80.

Waheed MA, Oni AO, Adejuyigbe SB, Adewumi BA, **2014**. Thermoeconomic and environmental assessment of crude oil distillation unit of a Nigeria refinery. Appl Thermal Eng, 66:191-205.

Citation: Odejobi OJ, 2015. Exergy and economic analyses of crude oil distillation unit. Afr J Eng Res, 3(2): 44-55.